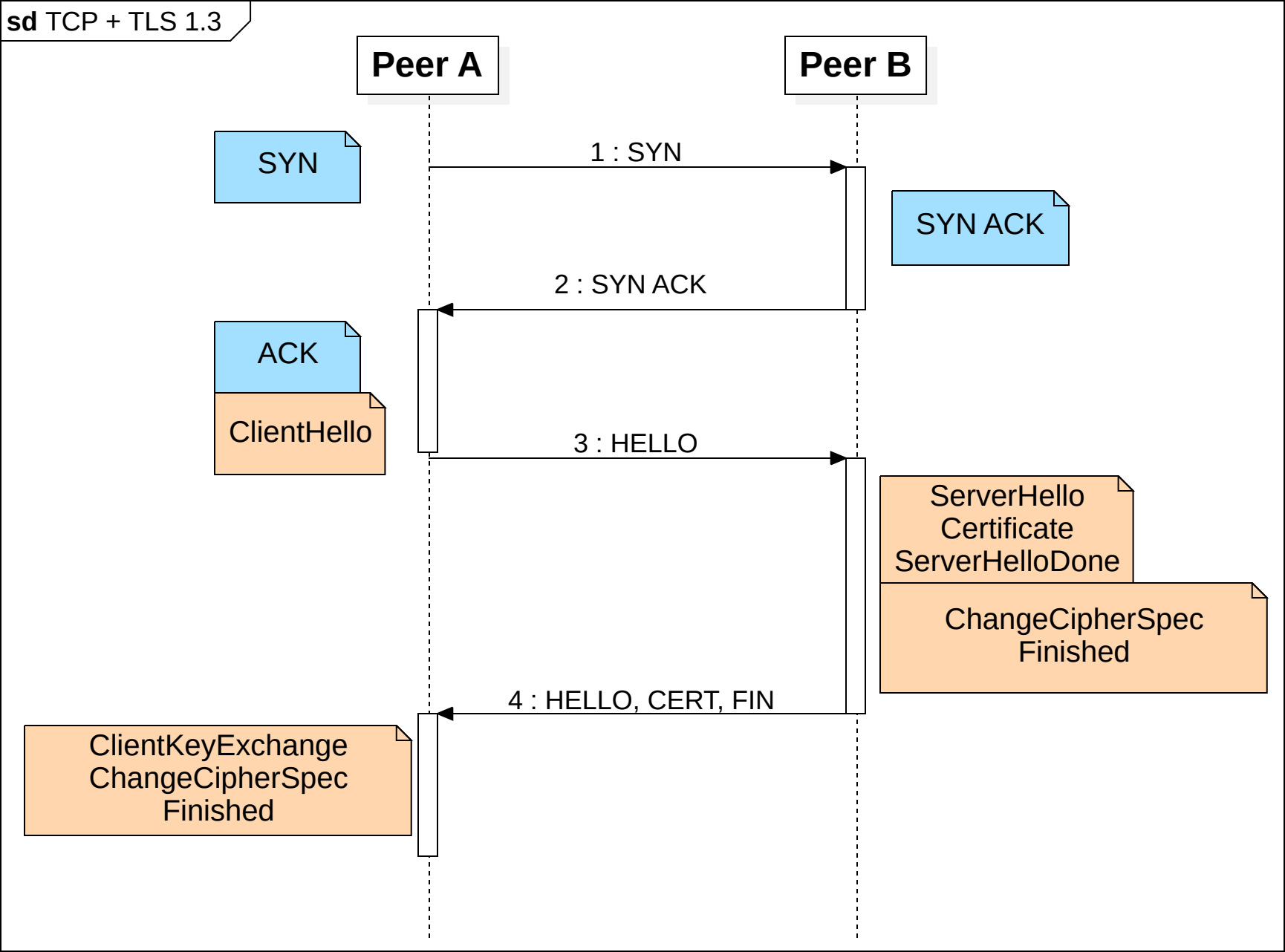
sd TCP + TLS 1.3
Peer A
Peer B
SYN
1 : SYN
SYN ACK
2 : SYN ACK
ACK
ClientHello
3 : HELLO
ServerHello
Certificate
ServerHelloDone
ChangeCipherSpec
Finished
4 : HELLO, CERT, FIN
ClientKeyExchange
ChangeCipherSpec
Finished